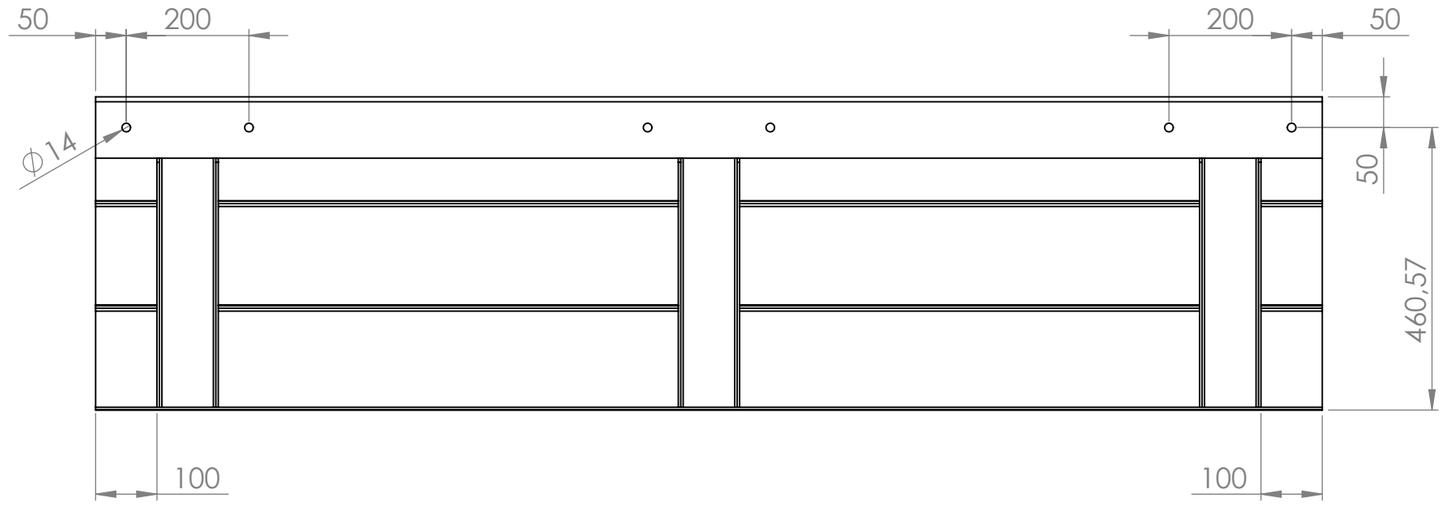

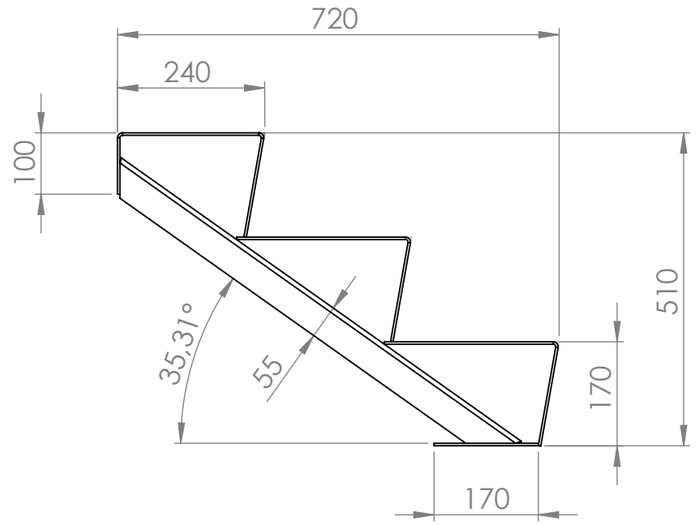

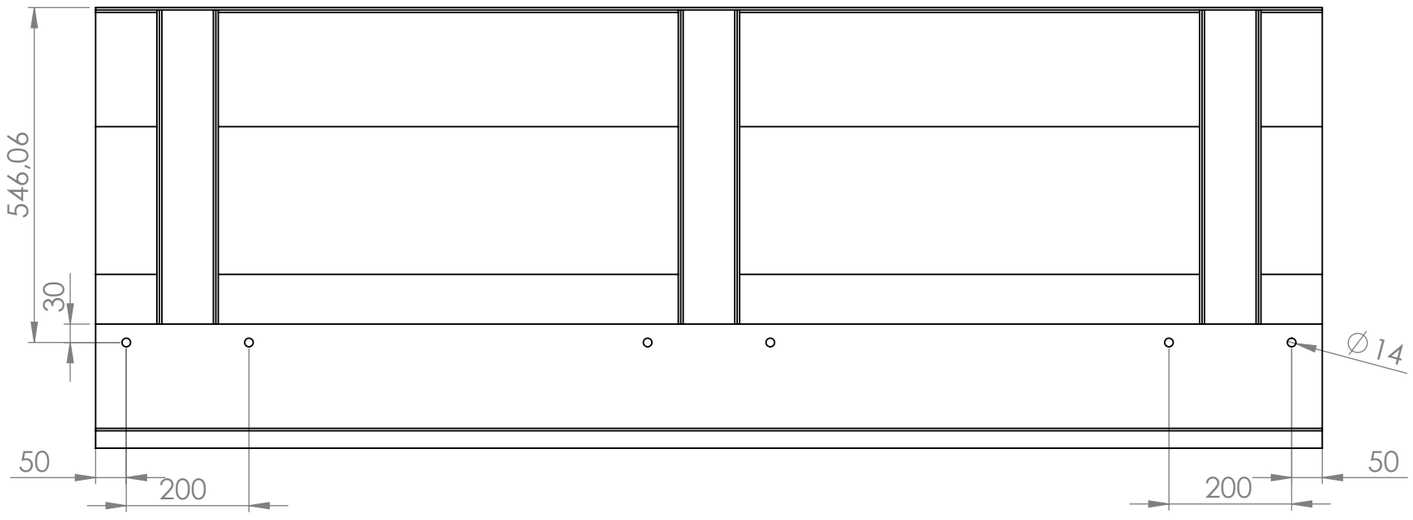

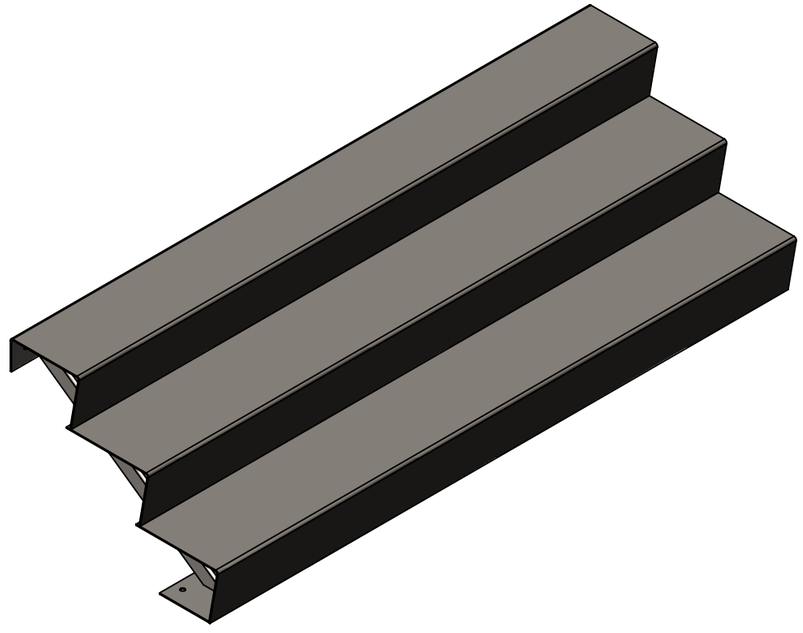

		DATE
DRAWN	Luuk van den Heuvel	25-5-2022
REVISION		

ADEZZ®
WE PRODUCE GARDEN PRODUCTS FOR PROFESSIONALS

Liessentstraat 4, 5405 AG Uden (NL).
t 0031 (0)413 - 27 41 68.
e info@adezz.com, i www.adezz.com

TITLE:

4mm Aluminum

Drawing.

AST3.4

A3

Color: -

Mass (kg): **38.71**

SCALE:1:10

SHEET 1 OF 6